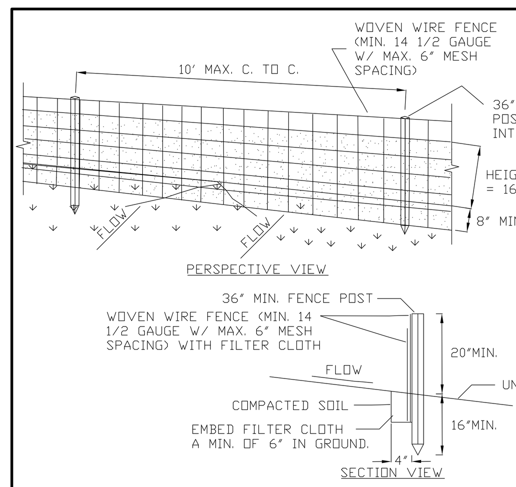

CONSTRUCTION SPECIFICATIONS

SYMBOL
—SF—

1. WOVEN WIRE FENCE TO BE FASTENED SECURELY TO FENCE POSTS WITH WIRE TIES OR STAPLES. POSTS SHALL BE STEEL EITHER "T" OR "U" TYPE OR HARDWOOD.
2. FILTER CLOTH TO BE TO BE FASTENED SECURELY TO WOVEN WIRE FENCE WITH TIES SPACED EVERY 24" AT TOP AND MID SECTION. FENCE SHALL BE WOVEN WIRE, 12 1/2 GAUGE, 6" MAXIMUM MESH OPENING.
3. WHEN TWO SECTIONS OF FILTER CLOTH ADJOIN EACH OTHER THEY SHALL BE OVER-LAPPED BY SIX INCHES AND FOLDED. FILTER CLOTH SHALL BE EITHER FILTER X, MIRAFI 100X, STABILINKA T140N, OR APPROVED EQUIVALENT.
4. PREFABRICATED UNITS SHALL BE GEOFAB, ENVIROFENCE, OR APPROVED EQUIVALENT.
5. MAINTENANCE SHALL BE PERFORMED AS NEEDED AND MATERIAL REMOVED WHEN "BULGES" DEVELOP IN THE SILT FENCE.

U.S. DEPARTMENT OF AGRICULTURE
NATURAL RESOURCES CONSERVATION SERVICE
NEW YORK STATE DEPARTMENT OF ENVIRONMENTAL CONSERVATION
NEW YORK STATE SOIL & WATER CONSERVATION COMMITTEE

SILT FENCE

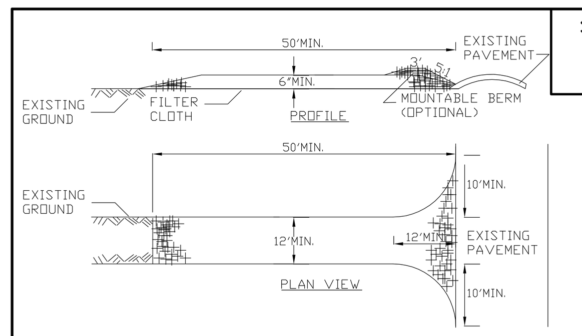

CONSTRUCTION SPECIFICATIONS

SYMBOL

1. STONE SIZE - USE 2" STONE, OR RECLAIMED OR RECYCLED CONCRETE EQUIVALENT.
2. LENGTH - NOT LESS THAN 50 FEET (EXCEPT ON A SINGLE RESIDENCE LOT WHERE A 30 FOOT MINIMUM LENGTH WOULD APPLY).
3. THICKNESS - NOT LESS THAN SIX (6) INCHES.
4. WIDTH - TWELVE (12) FOOT MINIMUM, BUT NOT LESS THAN THE FULL WIDTH AT POINTS WHERE INGRESS OR EGRESS OCCURS. TWENTY-FOUR (24) FOOT IF SINGLE ENTRANCE TO SITE.
5. FILTER CLOTH - WILL BE PLACED OVER THE ENTIRE AREA PRIOR TO PLACING OF STONE.
6. SURFACE WATER - ALL SURFACE WATER FLOWING OR DIVERTED TOWARD CONSTRUCTION ENTRANCES SHALL BE PIPED ACROSS THE ENTRANCE. IF PIPING IS IMPRACTICAL, A MOUNTABLE BERM WITH 5:1 SLOPES WILL BE PERMITTED.
7. MAINTENANCE - THE ENTRANCE SHALL BE MAINTAINED IN A CONDITION WHICH WILL PREVENT TRACKING OR FLOWING OF SEDIMENT ONTO PUBLIC RIGHTS-OF-WAY. ALL SEDIMENT SPILLED, DROPPED, WASHED OR TRACTED ONTO PUBLIC RIGHTS-OF-WAY MUST BE REMOVED IMMEDIATELY.
8. WHEN WASHING IS REQUIRED, IT SHALL BE DONE ON A AREA STABILIZED WITH STONE AND WHICH DRAINS INTO AN APPROVED SEDIMENT TRAPPING DEVICE.
9. PERIODIC INSPECTION AND NEEDED MAINTENANCE SHALL BE PROVIDED AFTER EACH RAIN.

U.S. DEPARTMENT OF AGRICULTURE
NATURAL RESOURCES CONSERVATION SERVICE
NEW YORK STATE DEPARTMENT OF ENVIRONMENTAL CONSERVATION
NEW YORK STATE SOIL & WATER CONSERVATION COMMITTEE

STABILIZED CONSTRUCTION ENTRANCE

CONSTRUCTION SPECIFICATIONS

1. ALL GRADED OR DISTURBED AREAS INCLUDING SLOPES SHALL BE PROTECTED DURING CLEARING AND CONSTRUCTION IN ACCORDANCE WITH THE APPROVED SEDIMENT CONTROL PLAN UNTIL THEY ARE PERMANENTLY STABILIZED.
2. ALL SEDIMENT CONTROL PRACTICES AND MEASURES SHALL BE CONSTRUCTED, APPLIED AND MAINTAINED IN ACCORDANCE WITH THE APPROVED SEDIMENT CONTROL PLAN AND THE "STANDARDS AND SPECIFICATIONS FOR SOIL EROSION AND SEDIMENT CONTROL IN DEVELOPING AREAS".
3. TOPSOIL REQUIRED FOR THE ESTABLISHMENT OF VEGETATION SHALL BE STOCKPILED IN AMOUNT NECESSARY TO COMPLETE FINISHED GRADING OF ALL EXPOSED AREAS.
4. AREAS TO BE FILLED SHALL BE CLEARED, GRUBBED, AND STRIPPED OF TOPSOIL TO REMOVE TREES, VEGETATION, ROOTS OR OTHER OBJECTIONABLE MATERIAL.
5. AREAS WHICH ARE TO BE TOPSOILED SHALL BE SCARIFIED TO A MINIMUM DEPTH OF FOUR INCHES PRIOR TO PLACEMENT OF TOPSOIL.
6. ALL FILLS SHALL BE COMPACTED AS REQUIRED TO REDUCE EROSION, SLIPPAGE, SETTLEMENT, SUBSIDENCE OR OTHER RELATED PROBLEMS. FILL INTENDED TO SUPPORT BUILDINGS, STRUCTURES AND CONDUITS, ETC. SHALL BE COMPACTED IN ACCORDANCE WITH LOCAL REQUIREMENTS OR CODES.
7. ALL FILL TO BE PLACED AND COMPACTED IN LAYERS NOT TO EXCEED 9 INCHES IN THICKNESS.
8. EXCEPT FOR APPROVED LANDFILLS, FILL MATERIAL SHALL BE FREE OF FROZEN PARTICLES, BRUSH, ROOTS, SOD, OR OTHER FOREIGN OR OTHER OBJECTIONABLE MATERIALS THAT WOULD INTERFERE WITH OR PREVENT CONSTRUCTION OF SATISFACTORY FILLS.
9. FROZEN MATERIALS OR SOFT, MUCKY OR HIGHLY COMPRESSIBLE MATERIALS SHALL NOT BE INCORPORATED IN FILLS.
10. FILL SHALL NOT BE PLACED ON SATURATED OR FROZEN SURFACES.
11. ALL BENCHES SHALL BE KEPT FREE OF SEDIMENT DURING ALL PHASES OF DEVELOPMENT.
12. SEEPS OR SPRINGS ENCOUNTERED DURING CONSTRUCTION SHALL BE HANDLED IN ACCORDANCE WITH THE STANDARD AND SPECIFICATION FOR SUBSURFACE DRAIN OR OTHER APPROVED METHOD.
13. ALL GRADED AREAS SHALL BE PERMANENTLY STABILIZED IMMEDIATELY FOLLOWING FINISHED GRADING.
14. STOCKPILES, BORROW AREAS AND SPOIL AREAS SHALL BE SHOWN ON THE PLANS AND SHALL BE SUBJECT TO THE PROVISIONS OF THIS STANDARD AND SPECIFICATION.

U.S. DEPARTMENT OF AGRICULTURE
NATURAL RESOURCES CONSERVATION SERVICE
NEW YORK STATE DEPARTMENT OF ENVIRONMENTAL CONSERVATION
NEW YORK STATE SOIL & WATER CONSERVATION COMMITTEE

LANDGRADING SPECIFICATIONS

Soil Stockpiling

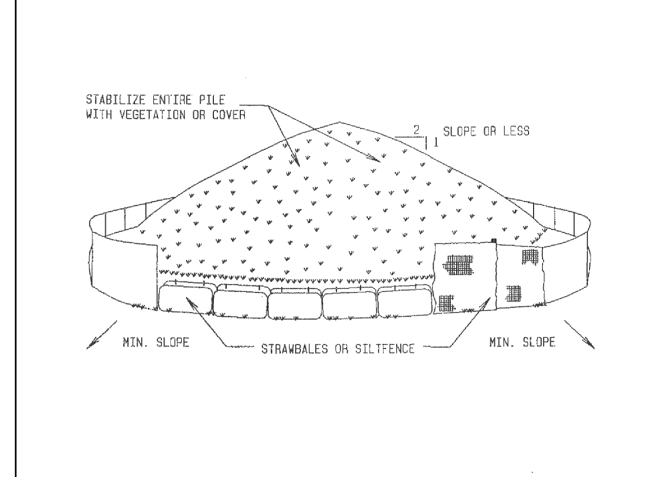

INSTALLATION NOTES

1. AREA CHOSEN FOR STOCKPILING OPERATIONS SHALL BE DRY AND STABLE.
2. MAXIMUM SLOPE OF STOCKPILE SHALL BE 1:2.
3. UPON COMPLETION OF SOIL STOCKPILING, EACH PILE SHALL BE SURROUNDED WITH EITHER SILT FENCING OR STRAWBALES, THEN STABILIZED WITH VEGETATION OR COVERED.
4. SEE SILT FENCE DETAIL FOR INSTALLATION OF SILTFENCE.

ROLLED EROSION CONTROL DETAIL

(NOT TO SCALE)

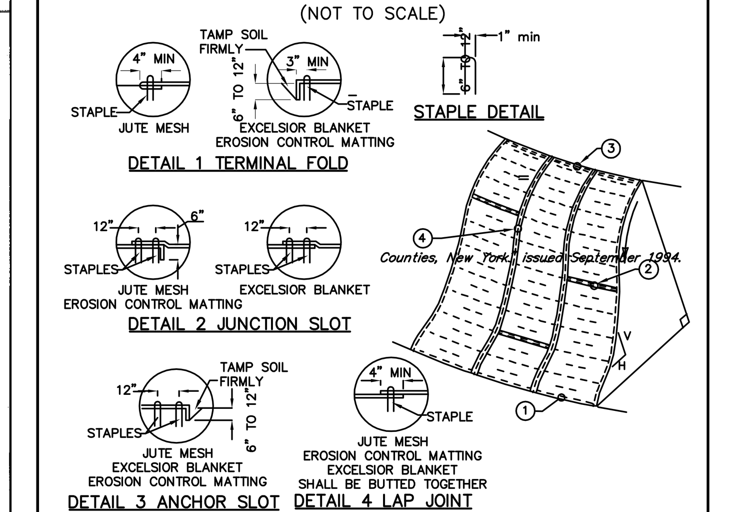

CONSTRUCTION SPECIFICATIONS

1. APPLY TO SLOPES GREATER THAN 3H:1V OR WHERE NECESSARY TO AID IN ESTABLISHING VEGETATION.
2. APPLY FERTILIZER, LIME AND SEED PRIOR TO PLACING MATTING.
3. STAPLES ARE TO BE PLACED ALTERNATELY, IN COLUMNS APPROXIMATELY 2' APART AND IN ROWS APPROXIMATELY 3' APART. APPROXIMATELY 175 STAPLES ARE REQUIRED PER 4'X225' ROLL OF MATERIAL AND 125 STAPLES ARE REQUIRED PER 4'X150' ROLL OF MATERIAL.
4. DISTURBED AREAS SHALL BE SMOOTHLY GRADED. EROSION CONTROL MATERIAL SHALL BE PLACED LOOSELY OVER GROUND SURFACE. DO NOT STRETCH.
5. ALL TERMINAL ENDS AND TRANSVERSE LAPS SHALL BE STAPLED AT APPROXIMATELY 12" INTERVALS.

VICINITY MAP SCALE: 1" = 1000'

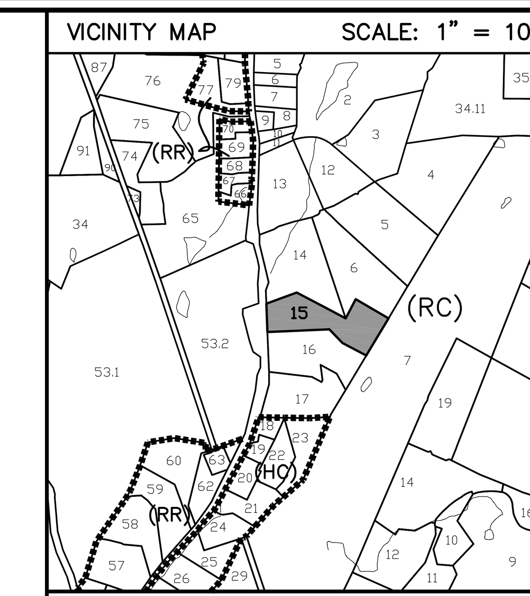

LOCATION MAP SCALE: 1" = 2000'

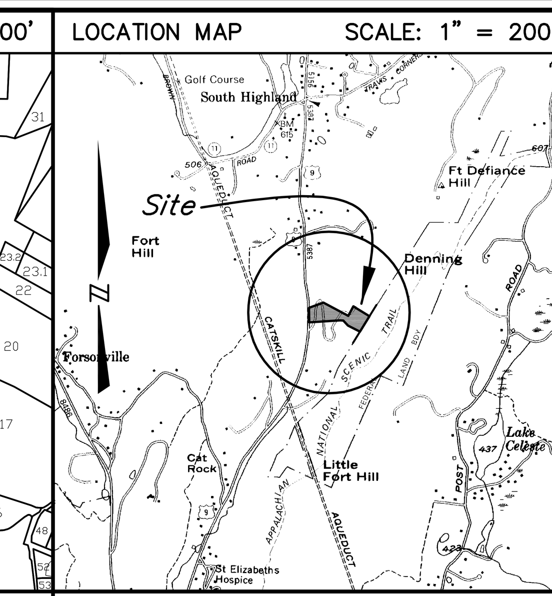

SITE DATA

TAX MAP NO: 71.-3-15
LOT AREA: 6.850 ACRES
ZONING DISTRICT: RURAL CONSERVATION (RC)
PROPOSED USE: SINGLE-FAMILY DWELLING
SCHOOL DISTRICT: GARRISON UNION FREE
FIRE: GARRISON VOLUNTEER FIRE COMPANT
AMBULANCE: GARRISON VOL. AMBULANCE CORPS
SUBDIVISION PLAT: SALVATORE C. CUCCIA
SUBDIVISION LOT NO. 3
FILED MAP #2311 - MAY 27, 1988

MAP NOTES

1. THE SURVEY DATA AND TOPOGRAPHIC INFORMATION SHOWN HEREON IS AS SHOWN ON THAT CERTAIN MAP ENTITLED "SURVEY OF PROPERTY PREPARED FOR STEPHEN & LINDA MAGNUSSON-ROSARIO..." PREPARED BY BADEY & WATSON, SURVEYING AND ENGINEERING, P.C. DATED APRIL 8, 2015. REVISED FEBRUARY 11, 2016.

REVISIONS

DATE	DESCRIPTION
08/06/20	ORIGINAL DRAWING
08/24/20	ADJUST SLOPES WITH RECTANGLE PER SEC. 175-36.B.6. OF THE CODE

ZONING DATA

DISTRICT: RURAL CONSERVATION (RC)

	Required	Proposed
Maximum density (conservation)	5 ac/du	-
Minimum lot size (conventional/ODA)	10 ac	6.850 ac
Minimum lot size (conservation)	varies	-
Minimum road frontage for conventional subdivision		
Town road	250 ft	-
County/state road	300 ft	270.10 ft
ODA ROW	100 ft	-
Minimum front yard setback		
Town road	60 ft	69.1 ft
County/state road	60 ft	-
Minimum side yard setback	30 ft	37.7 ft
Minimum rear yard setback	50 ft	108 ft
Max. impervious surface coverage	3.9%	7.8%
Maximum height*	40 ft	30.0 ft
Max. footprint for non-res struct.	6,000 sf	-

*Structures built within the ridgeline protection area shall be no more than 30 feet in height.

OVERLAY DISTRICTS

175-13 Floodplain Overlay District - NFIP Map (FPO)	- NOT WITHIN
175-18.1 Mobile Home Overlay District (MHO)	- NOT WITHIN
175-14 Cold Spring Reservoir Water Shed Overlay (WSO)	- NOT WITHIN
175-15 Scenic Protection Overlay (SPO)	- NOT WITHIN
175-16 Aquifer Overlay District (AQO) Town-wide Regional Aquifer (RA) only.	- NOT WITHIN
175-18 Open Space Conservation Overlay District (OSO)	- NOT WITHIN
175-35 Within 100' Buffer of Wetlands or Watercourse	- NOT WITHIN
175-36 Steep Terrain	- NOT WITHIN
175-36 Ridge Line Protection	- WITHIN
175-37 Protection of Agriculture	- NOT ABUTTING

WARNING STAMP

ALTERATION OF THIS DOCUMENT, IN ANY WAY, BY ANY PERSON NOT UNDER THE DIRECTION OF A LICENSED PROFESSIONAL ENGINEER OR LAND SURVEYOR, AS APPROPRIATE, IS A VIOLATION OF THE EDUCATION LAW OF THE STATE OF NEW YORK

PHILIPSTOWN STANDARD SITE PLAN NOTES:

1. ALL PROPOSED UTILITIES SHALL BE PLACED UNDERGROUND.
2. ALL EXISTING TREES TO BE SAVED SHALL BE FLAGGED AND SNOW FENCE IS TO BE ERECTED AROUND TREES PRIOR TO ANY CONSTRUCTION ACTIVITIES.
3. PRIOR TO THE INITIATION OF CONSTRUCTION, THE APPLICANT OR HIS REPRESENTATIVE WILL MEET WITH THE TOWN ENGINEER, HIGHWAY SUPERINTENDENT, BUILDING INSPECTOR, SITE CONTRACTOR, AND/OR ANY ADDITIONAL OUTSIDE AGENCIES THAT MAY HAVE JURISDICTION FOR A PRE-CONSTRUCTION CONFERENCE TO REVIEW ALL FACETS OF CONSTRUCTION AND REQUIRED INSPECTIONS.
4. ALL EROSION CONTROLS ARE TO BE SET IN PLACE PRIOR TO ANY LAND DISTURBANCES ON THE SITE
5. DURING THE COURSE OF CONSTRUCTION, WHEREVER THE TOWN HIGHWAY SUPERINTENDENT AND/OR TOWN ENGINEER DETERMINE THAT ADDITIONAL DRAINAGE FACILITIES ARE REQUIRED TO PROVIDE POSITIVE DRAINAGE WITHIN THE RIGHT-OF-WAY OR ADJACENT PROPERTY, THEY SHALL BE INSTALLED BY THE DEVELOPER AT NO COST TO THE TOWN
6. ANY ACTIVITIES WITHIN 100 FEET OF A TOWN REGULATED WETLAND, A TOWN REGULATED STREAM OR OTHER BODY OR WATER REQUIRES A WETLAND/WATERCOURSE PERMIT FROM THE TOWN OF PHILIPSTOWN.
7. PER NEW YORK STATE LAW, THE CONTRACTOR SHALL CALL DIG SAFELY NY AT 1-800-962-7962 TWO (2) FULL DAYS PRIOR TO PERFORMING ANY EXCAVATION WORK.
8. ALL EMBANKMENTS ARE TO BE GRADED AND SEEDED IMMEDIATELY UPON BEING LAID BACK.
9. STABILIZED CONSTRUCTION ENTRANCES SHALL BE PROVIDED AT ALL DRIVEWAY ENTRANCES AND SHALL CONFORM TO NEW YORK STATE GUIDELINES FOR URBAN EROSION AND SEDIMENT CONTROL.
10. PRIOR TO THE INITIATION OF CONSTRUCTION ON ANY NEW SITE DRIVEWAY WHICH GAINS ACCESS FROM A TOWN ROAD, THE PROPERTY OWNER SHALL BE REQUIRED TO OBTAIN A DRIVEWAY PERMIT FROM THE PHILIPSTOWN HIGHWAY SUPERINTENDENT.
11. STONEWALLS SHALL BE PRESERVED WHEREVER POSSIBLE.
12. ALL AREAS SHOWN BY LIMITS OF DISTURBANCE SHALL BE FLAGGED AND SUITABLE BARRIERS ERECTED PRIOR TO ANY CONSTRUCTION ACTIVITIES.
13. NO MECHANICAL EQUIPMENT SHALL BE MOUNTED ON THE ROOF, IF VISIBLE FROM THE STREET, UNLESS AUTHORIZED BY THE PLANNING BOARD.
14. TRAILERS SHALL NOT BE PERMITTED AS OUTDOOR STORAGE AREAS. ANY TRAILER WHICH HAS SUBSTANTIALLY REMAINED ON SITE FOR A PERIOD OF 30 DAYS SHALL BE CONSIDERED OUTDOOR STORAGE.
15. IF APPLICABLE, PRIOR TO COMMENCEMENT OF ANY CLEARING, GRADING, OR EXCAVATION IN CONNECTION WITH THE PROPOSED CONSTRUCTION ACTIVITY, THE OWNER OF RECORD SHALL FILE A "NOTICE OF INTENT" WITH THE NYS DEC AND THE TOWN OF PHILIPSTOWN. WHEN ALL CONSTRUCTION HAS BEEN COMPLETED AND THE SITE HAS REACHED FINAL STABILIZATION THE OWNER SHALL SUBMIT A "NOTICE OF TERMINATION" TO THE NYS DEC AND THE TOWN OF PHILIPSTOWN.
16. PRIOR TO THE ISSUANCE OF A CERTIFICATE OF OCCUPANCY THE PROJECT OWNER SHALL DELIVER TO THE PLANNING BOARD AN AS-BUILT SURVEY SHOWING THE LOCATION OF ALL BUILDINGS, SITE IMPROVEMENTS, AND THE LOCATION AND ELEVATION OF ALL STORMWATER MANAGEMENT FACILITIES INCLUDING OUTLET CONTROL STRUCTURES, WEIR WALLS, OUTLET PIPES AND OVERFLOW SPILLWAYS.

CONSTRUCTION SEQUENCE

1. CONDUCT PRE-CONSTRUCTION CONFERENCE WITH OWNER, CONTRACTOR, AND REPRESENTATIVES OF THE TOWN OF PHILIPSTOWN AND INVOLVED AGENCIES.
2. ESTABLISH DISTURBANCE LIMITS, AND DENOTE RESOURCES TO BE PROTECTED.
3. CONSTRUCT STABILIZED CONSTRUCTION ENTRANCE (SCE) AND ROADWAY.
4. INSTALL SILT FENCING AND SEDIMENT CONTROLS.
5. ACCOMPLISH REQUIRED CLEARING/GRUBBING OF SITE.
6. TOPSOIL REMOVAL AND STOCKPILING PERFORMED WHERE SPECIFIED.
7. STAGED DRIVEWAY CONSTRUCTION, AND STABILIZE GRADING AS WORK PERFORMED.
8. SITE DEVELOPMENT/HOUSE CONSTRUCTION AND SITE UTILITIES PER APPROVED PLANS.
9. REMOVE STAGING AREAS UPON COMPLETION OF CONSTRUCTION.
10. SOIL RESTORATION OF DISTURBED AREAS.
11. REMOVE EROSION AND SEDIMENT CONTROL PRACTICES.

EROSION & SEDIMENT CONTROL NOTES

1. PRIOR TO THE START OF CONSTRUCTION ACTIVITY, THE TEMPORARY STRUCTURAL SEDIMENT CONTROLS (SILT FENCE, STABILIZED CONSTRUCTION ENTRANCE, ETC.) FOR THE ANTICIPATED WORK MUST BE INSTALLED.
2. THE LIMITS OF LAND DISTURBANCE MUST BE PHYSICALLY MARKED ON-SITE WITH ORANGE CONSTRUCTION FENCE. SILT FENCE MUST BE INSTALLED ON-CONTOUR AND SHALL NOT BE USED TO DELINEATE THE LIMIT OF CONTRACT, OR PROPERTY LINE.
3. MASS CLEARINGS AND GRADING MUST BE AVOIDED. CLEAR AND GRUB ONLY WHAT IS REQUIRED FOR IMMEDIATE CONSTRUCTION ACTIVITY.
4. EXPOSED SOILS ANTICIPATED TO REMAIN IDLE FOR MORE THAN FOURTEEN (14) DAYS SHALL BE IMMEDIATELY STABILIZED WITH TEMPORARY SEED AND MULCH.
5. WHEREVER POSSIBLE, NATURAL VEGETATION IS TO BE PROTECTED BY LIMITING THE CLEARING AND GRUBBING OPERATION, AS WELL AS RESTRICTING CONSTRUCTION EQUIPMENT TO THE WORK AREA.
6. WHERE FEASIBLE, LARGE TREES TO BE PRESERVED SHALL BE FENCED OFF SO THAT THE ROOT SYSTEM AND OVERHANGING BRANCHES ARE PROTECTED FROM CONSTRUCTION EQUIPMENT.
7. OFF-SITE RUNOFF SHOULD BE DIVERTED FROM HIGHLY ERODIBLE SOILS AND STEEP SLOPES TO STABLE AREAS WITH TEMPORARY DIKES AND/OR SWALES.
8. PERMANENT SEEDING SHOULD OPTIMALLY BE UNDERTAKEN IN THE SPRING FROM MARCH THROUGH MAY, AND IN LATE SUMMER AND EARLY FALL FROM SEPTEMBER TO OCTOBER 15. PERMANENT SEEDING MAY BE UNDERTAKEN DURING THE SUMMER, PROVIDING AN ADEQUATE WATERING SCHEDULE IS MAINTAINED.
9. DURING THE PEAK SUMMER MONTHS AND IN THE FALL AFTER OCTOBER 15, WHEN SEEDING IS OTHERWISE FOUND TO BE IMPRACTICABLE, AN APPROPRIATE TEMPORARY MULCH SHALL BE APPLIED. TEMPORARY SEEDING WITH RYE CAN BE UTILIZED THROUGH NOVEMBER.
10. ALL SLOPES STEEPER THAN 3H:1V AS WELL AS PERIMETER DIKES, SEDIMENT BASINS OR TRAPS, AND EMBANKMENTS SHALL, UPON COMPLETION, BE IMMEDIATELY STABILIZED WITH SOD, SEED AND ANCHORED STRAW MULCH, OR OTHER APPROVED STABILIZATION MEASURES (RECP).
11. MAINTENANCE SHALL BE PERFORMED AS NECESSARY TO ENSURE CONTINUED STABILIZATION. AREAS OUTSIDE OF THE PERIMETER SEDIMENT CONTROL SYSTEM SHALL NOT BE DISTURBED.
12. AREAS WHERE PERMANENT VEGETATION IS TO BE ESTABLISHED SHALL BE DRESSED WITH A MINIMUM OF 4 INCHES OF TOPSOIL. COMPACTED SUB-SOILS SHALL BE DISKED OR TILLED PRIOR TO PLACEMENT OF TOPSOIL. SURFACE SHALL BE RAKED SMOOTH, REMOVING STICKS, FOREIGN MATTER, AND STONES OVER 1" IN DIAMETER.
13. TOPSOIL SHALL HAVE AT LEAST 6% BY WEIGHT OF FINE TEXTURED STABLE ORGANIC MATERIAL, AND NO GREATER THAN 20%. IT SHALL HAVE NOT LESS THAN 20% OF MATERIAL PASSING THE NO. 200 SIEVE, AND NOT MORE THAN 15% CLAY. IT SHALL BE RELATIVELY FREE OF STONES OVER 1-1/2" INCHES IN DIAMETER, TRASH, NOXIOUS WEEDS, AND SHALL HAVE LESS THAN 10% GRAVEL.
14. SEEDING FOR TEMPORARY STABILIZATION OR IN PREPARATION OF WINTER SHUTDOWN SHALL BE APPLIED AT THE FOLLOWING RATE AND SCHEDULE: SPRING OR SUMMER OR EARLY FALL, USE RYEGRASS AT 30 LBS PER ACRE. LATE FALL OR EARLY WINTER, USE WINTER RYE AT 100 LBS PER ACRE.
15. PERMANENT SEEDING FOR FINAL STABILIZATION SHOULD BE APPLIED EITHER FROM SPRING-THAW TO MID-MAY OR MID-AUGUST TO EARLY OCTOBER WITH A 65/20/15 MIX OF KENTUCKY BLUEGRASS/PERENNIAL RYEGRASS/FINE FESCUE AT 160 LBS. PER ACRE. IF SEEDING IS DONE BETWEEN MID-MAY AND MID-AUGUST, IRRIGATION MAY BE REQUIRED FOR TO ACHIEVE FINAL STABILIZATION.
16. HAY OR STRAW MULCH SHALL BE APPLIED TO ALL SEEDED AREAS, TEMPORARY OR PERMANENT, AT A RATE OF 2 TONS PER ACRE (OR 3 BALES PER 1,000 SQ FT).
17. WHEN SPECIFIED, ROLLED EROSION CONTROL BLANKET SHALL BE STRAW BIODEGRADABLE DOUBLE-NET BLANKET (EBX-S2 NN) AS MANUFACTURED BY CARTHAGE MILLS, SHALL BE PROVIDED ON ALL FINAL GRADES STEEPER THAN 1 VERTICAL OVER 3 HORIZONTAL (UP TO 2H:1V).
18. WHEN SPECIFIED, INLET PROTECTION SHALL BE INSTALLED CONCURRENTLY WITH CATCH BASIN INSTALLATION. IN THE SAME MANNER, ROCK OUTLET PROTECTION SHALL BE INSTALLED CONCURRENTLY WITH PIPE DISCHARGE INSTALLATION.
19. EROSION AND SEDIMENT CONTROL PRACTICES WITHIN THE ACTIVE WORK AREA SHALL BE INSPECTED DAILY TO ENSURE THAT THEY ARE BEING MAINTAINED IN EFFECTIVE OPERATING CONDITION AT ALL TIMES.
20. IN AREAS WHERE SOIL DISTURBACE ACTIVITY HAS TEMPORARILY OR PERMANENTLY CREASED, THE APPLICATION OF SOIL STABILIZATION MEASURES MUST BE INITIATED BY THE END OF THE NEXT BUSINESS DAY AND COMPLETED WITHIN FOURTEEN (14) DAYS FROM THE DATE THE CURRENT SOIL DISTURBANCE ACTIVITY CEASED.
21. DISCHARGES FROM DEWATERING ACTIVITIES, INCLUDING DISCHARGES FROM DEWATERING OF TRENCHES AND EXCAVATIONS, MUST BE MANAGED BY APPROPRIATE CONTROL MEASURES.
22. STABILIZED CONSTRUCTION ENTRANCE(S) SHALL BE MAINTAINED SO AS TO PREVENT THE TRACKING OF SEDIMENT OFF-SITE. SEDIMENT TRACKED ONTO PAVED RIGHTS-OF-WAY SHALL BE SWEPT CLEAN AT THE END OF EACH WORK DAY.
23. SEDIMENT SHALL BE REMOVED FROM SILT FENCE WHEN IT BECOMES 6" DEEP AT THE FABRIC. SILT FENCE SHALL BE REPLACED WHEN FABRIC BECOMES RIPPED OR FRAYED.
24. SEDIMENT SHALL BE REMOVED FROM SEDIMENT TRAPPING DEVICES WHEN ACCULULATION REACHES 50% OF DESIGN CAPACITY. STONE SHALL BE CLEANED OR REPLACED WHEN SEDIMENT POOL NO LONGER DRAINS PROPERLY.

GOOD HOUSEKEEPING

1. ALL WASTE MATERIAL WILL BE COLLECTED AND STORED IN A SECURELY LIDDED METAL DUMPSTER SUPPLIED BY A WASTE HANDLER THAT IS A LICENSED SOLID WASTE MANAGEMENT COMPANY. ALL TRASH AND CONSTRUCTION DEBRIS FROM THE SITE SHALL BE DEPOSITED IN THE DUMPSTER(S). THE DUMPSTER SHALL BE EMPTIED ON AN AS-NEEDED BASIS AND THE TRASH WILL BE HAULED TO AN APPROVED LANDFILL. NO CONSTRUCTION MATERIALS WILL BE BURIED ON-SITE. ALL PERSONNEL WILL BE INSTRUCTED REGARDING THE CORRECT PROCEDURE FOR WASTE DISPOSAL.
2. ALL SANITARY WASTE WILL BE COLLECTED FROM THE PORTABLE UNITS A MINIMUM OF TWO TIMES PER WEEK BY A LICENSED SANITARY WASTE MANAGEMENT CONTRACTOR.
3. GOOD HOUSEKEEPING AND SPILL CONTROL PRACTICES WILL BE FOLLOWED DURING CONSTRUCTION TO MINIMIZE STORMWATER CONTAMINATION FROM PETROLEUM PRODUCTS, FERTILIZERS, PAINTS, AND CONCRETE. TO PREVENT STORMWATER CONTAMINATION FROM THE SITE, GOOD HOUSEKEEPING PRACTICES ARE LISTED BELOW:
   - FERTILIZERS WILL BE APPLIED ONLY IN THE MINIMUM AMOUNTS RECOMMENDED BY THE MANUFACTURER, UNLESS SPECIFIED OTHERWISE BY THE ENGINEER AND WILL BE WORKED INTO THE SOIL TO LIMIT EXPOSURE TO STORMWATER.
   - FERTILIZERS WILL BE STORED IN A COVERED SHED AND PARTIALLY USED BAGS WILL BE TRANSFERRED TO A SEALABLE BIN TO AVOID SPILLS.
   - A COVERED DUMPSTER WILL BE USED FOR ALL WASTE MATERIALS.
   - MATERIALS AND EQUIPMENT NECESSARY FOR SPILL CLEAN-UP WILL BE KEPT IN THE TEMPORARY MATERIAL STORAGE TRAILER ON-SITE. EQUIPMENT WILL INCLUDE BUT NOT BE LIMITED TO: BROOMS, DUST PANS, MOPS, RAGS, GLOVES, GOGGLES, FAST ABSORBENT MATERIAL, SAND, SAW DUST, AND PLASTIC AND METAL TRASH CONTAINERS.
   - CONCRETE TRUCKS WILL NOT BE ALLOWED TO WASH OUT OR DISCHARGE SURPLUS CONCRETE OR DRUM WASH WATER ON THE SITE.
   - WHEN TESTING/CLEANING OF WATER SUPPLY LINES, THE DISCHARGE FROM THE TESTED PIPE WILL BE COLLECTED AND CONVEYED TO A COMPLETED STORMWATER COLLECTION SYSTEM.
   - A STABILIZED CONSTRUCTION ENTRANCE WILL BE CONSTRUCTED TO REDUCE VEHICLE TRACKING OF SEDIMENT.
   - DUMP TRUCKS HAULING MATERIAL FROM THE CONSTRUCTION SITE WILL BE COVERED WITH A TARPAULIN.
   - ALL RUTS CAUSED BY EQUIPMENT USED FOR SITE CLEARING AND GRADING WILL BE ELIMINATED BY RE-GRADING.
4. VEHICLE MAINTENANCE - ALL ON-SITE VEHICLES WILL BE MONITORED FOR LEAKS AND RECEIVE REGULAR PREVENTATIVE MAINTENANCE TO REDUCE THE CHANCE OF LEAKAGE. ANY VEHICLE LEAKING FUEL OR HYDRAULIC FUEL WILL BE IMMEDIATELY SCHEDULED FOR REPAIRS AND USE WILL BE DISCONTINUED UNTIL REPAIRS ARE MADE.
5. SPILL PREVENTION AND RESPONSE - THE FOLLOWING CONTROLS AND PROCEDURES SHALL BE USED TO MINIMIZE THE POTENTIAL FOR LEAKS, SPILLS AND OTHER RELEASES:
   - PERSONNEL WILL BE MADE AWARE OF EMERGENCY TELEPHONE NUMBERS.
   - THE OWNER/OPERATOR AND OR CONTRACTOR SHALL IMMEDIATELY CONTACT NYSDEC IN THE EVENT OF A SPILL, AND SHALL TAKE ALL APPROPRIATE STEPS TO CONTAIN THE SPILL, INCLUDING CONSTRUCTION OF A DIKE AROUND THE SPILL AND PLACING ABSORBENT MATERIAL OVER THIS SPILL.
   - THE OWNER/OPERATOR AND OR CONTRACTOR SHALL INSTRUCT PERSONNEL THAT SPILLAGE OF FUELS, OILS, AND SIMILAR CHEMICALS MUST BE AVOIDED.
   - OILS, AND CHEMICALS WILL BE STORED IN APPROPRIATE AND TIGHTLY CAPPED CONTAINERS. CONTAINERS SHALL NOT BE DISPOSED OF ON THE PROJECT SITE.
   - OILS, CHEMICALS, MATERIAL, EQUIPMENT, AND SANITARY FACILITIES WILL BE STORED/LOCATED AWAY FROM TREES AND AT LEAST 100 FEET FROM STREAMS, WELLS, WET AREAS, AND OTHER ENVIRONMENTALLY SENSITIVE SITE.
   - DISPOSE OF CHEMICAL CONTAINERS AND SURPLUS CHEMICALS OFF THE PROJECT SITE IN ACCORDANCE WITH LABEL DIRECTIONS AND LEGAL REQUIREMENTS.
   - USE TIGHT CONNECTIONS AND HOSES WITH APPROPRIATE NOZZLES IN ALL OPERATIONS INVOLVING FUELS.
   - USE FUNNELS WHEN POURING FUELS, LUBRICATING MATERIALS OR CHEMICALS.
   - REFUELING OF CONSTRUCTION EQUIPMENT WILL TAKE PLACE IN PARKING AREAS TO PROVIDE RAPID RESPONSE TO EMERGENCY SITUATIONS.
   - PETROLEUM SPILLS AND MOST HAZARDOUS MATERIALS SPILLS MUST BE REPORTED TO THE NYS DEC HOTLINE (1-800-457-7362), UNLESS THEY MEET **ALL** OF THE FOLLOWING CRITERIA:

     THE SPILL IS KNOWN TO BE LESS THAN 5 GALLONS; AND

     THE SPILL IS CONTAINED AND UNDER THE CONTROL OF THE SPILLER; AND

     THE SPILL HAS NOT AND WILL NOT REACH THE STATE'S WATER OR ANY LAND; AND

     THE SPILL IS CLEANED UP WITHIN 2 HOURS OF DISCOVERY.
   - SPILLS SHALL ALSO BE REPORTED TO THE LOCAL AUTHORITIES, IF REQUIRED. FOR SPILLS NOT DEEMED REPORTABLE, THE FACTS CONCERNING THE INCIDENT SHALL BE DOCUMENTED BY THE SPILLER, AND A RECORD MAINTAINED FOR ONE YEAR.

PROPOSED GRASS SWALE DETAIL

(NOT TO SCALE)

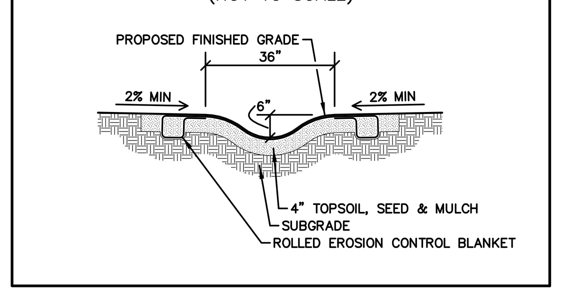

UNDERGROUND WARNING - NYS CODE RULE 753

NEW YORK STATE INDUSTRIAL CODE 53 REQUIRES EXCAVATORS TO CALL DIG SAFELY NEW YORK, INC. (800-962-7962) FOR A MEMBER-UTILITY LOCATION REQUEST AT LEAST TWO (2) WORKING DAYS, BUT NOT MORE THAN TEN (10) WORKING DAYS BEFORE ANY EXCAVATION OR DEMOLITION STARTS, REGARDLESS OF LOCATION. NOT ALL UTILITIES AND MUNICIPALITIES ARE MEMBERS OF DIG SAFELY NEW YORK, INC. AND NON-MEMBER UTILITY OPERATORS MUST BE CONTACTED DIRECTLY.

ORANGE CONSTRUCTION FENCE

NOT TO SCALE

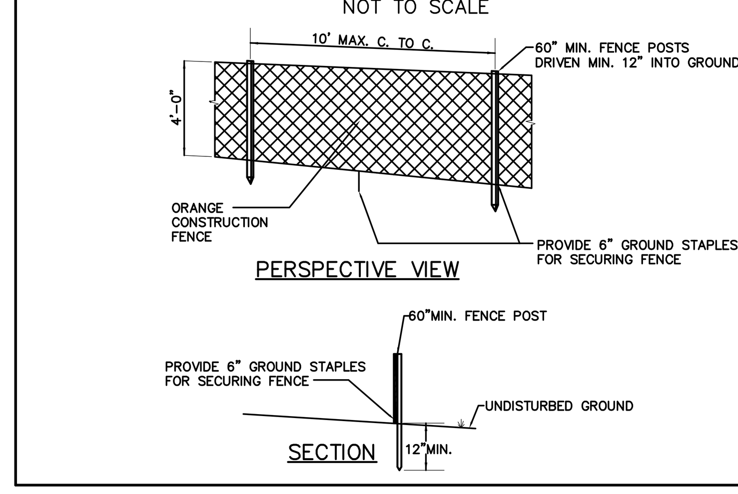

TIMBARRIER™ TRAFFIC BARRIER DETAIL

(NOT TO SCALE)

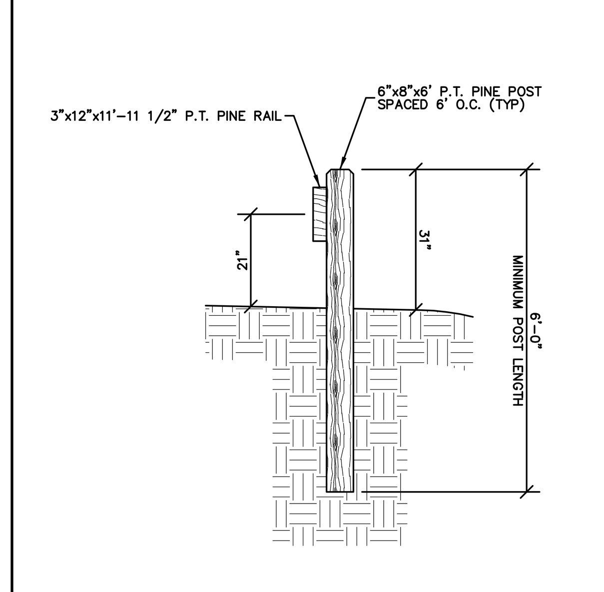

NOTES:

1. INSTALLATION TO BE COMPLETED IN ACCORDANCE WITH MANUFACTURE'S SPECIFICATIONS.
2. DO NOT SCALE DRAWINGS.
3. INCREASE POST LENGTH TO 6' OR 7' IF BACK OF POST IS CLOSER THAN 24" TO TOP OF SLOPE OR WHEN LOCATED IN CLIMATES WHERE FROST HEAVING MAY OCCUR.
4. DRIVE POSTS OR AUGER, BACKFILL WITH NATIVE SOIL AND COMPACT EVERY 12".
5. ALL TIMBER #1 S4S SOUTHERN PINE, PRESSURE TREATED: AWPA-C-14, WOOD FOR USE IN HIGHWAY CONSTRUCTION.
6. TYPICAL POST: 6"x8"x6' - TYPICAL RAIL: 3"x12"x11'-11 1/2", FOR RADIUS SECTIONS SPECIFY 3"x12"x5'-11 1/2".
7. FASTENERS: ASTM A307; A242; F436 TYPE 3; A563 DH3.
8. TIMBARRIER (TM) SPLICE PLATE & PLATE WASHER ASTM-A558.
9. UNDER EACH BOLT HEAD ON FACE OF RAIL INSTALL ONE 7/8" WASHER.
10. REFER TO DRAWINGS 651-001b FOR TERMINAL DETAILS.
11. CONTRACTOR' NOTE: FOR PRODUCT AND COMPANY INFORMATION VISIT www.CADdetails.com/info REFERENCE NUMBER 651-001.

PROPOSED GRAVEL DRIVEWAY DETAIL

(NOT TO SCALE)

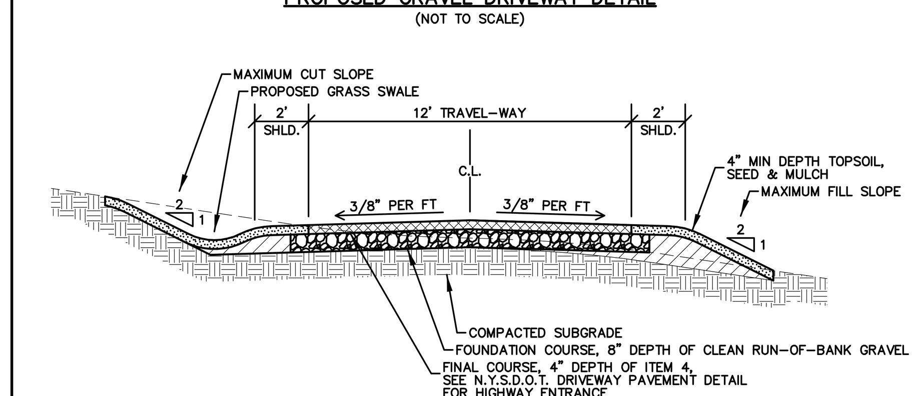

RETAINING WALL (CUT) DETAIL

(NOT TO SCALE)

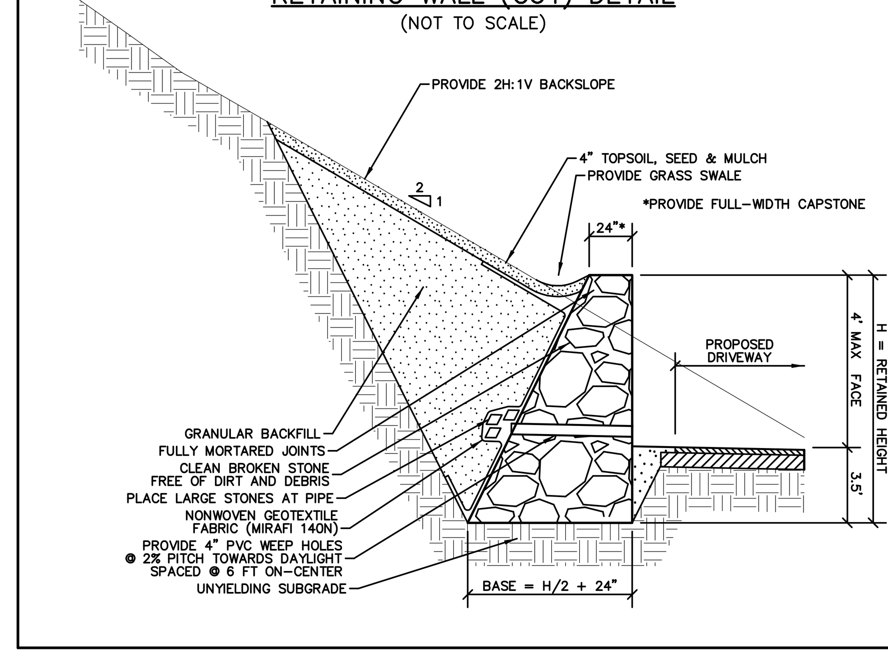

SIDE-INLET C.B. DETAIL

(NOT TO SCALE)

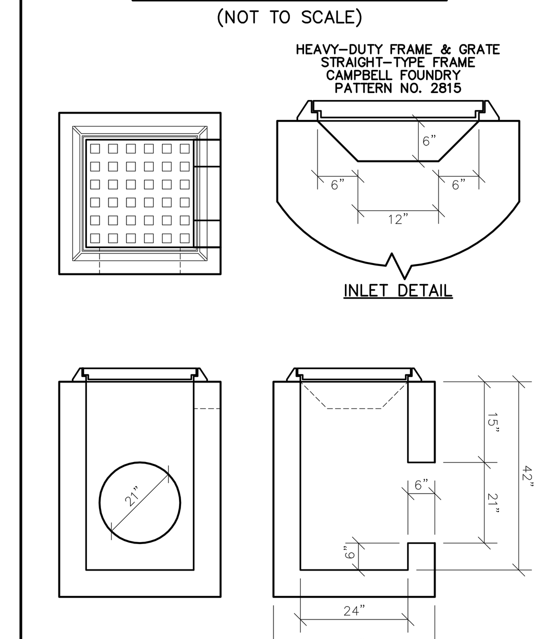

NOTES:

1. CONCRETE TO TEST 4,000 PSI @ 28 DAYS IN CONFORMANCE WITH ASTM C-478-68.
2. 6X6 6/6 W.W.F. REINFORCING MESH PER MANUFACTURER.
3. CUSTOM PRECAST CONCRETE CATCH BASIN TO BE DESIGNED BY MANUFACTURER. OVERSIZED HOLE SIZE TO BE CONFIRMED BASED ON A CORRUGATED 15" H.D.P.E.
4. CATCH BASIN, FRAME AND GRATE SHALL BE DESIGNED TO AASHTO H-20 TRAFFIC LOADING SPECIFICATIONS.
5. PRECAST UNIT SHALL BE MANUFACTURED BY MID-HUDSON CONCRETE PRODUCTS, INC., OR APPROVED EQUIVALENT.

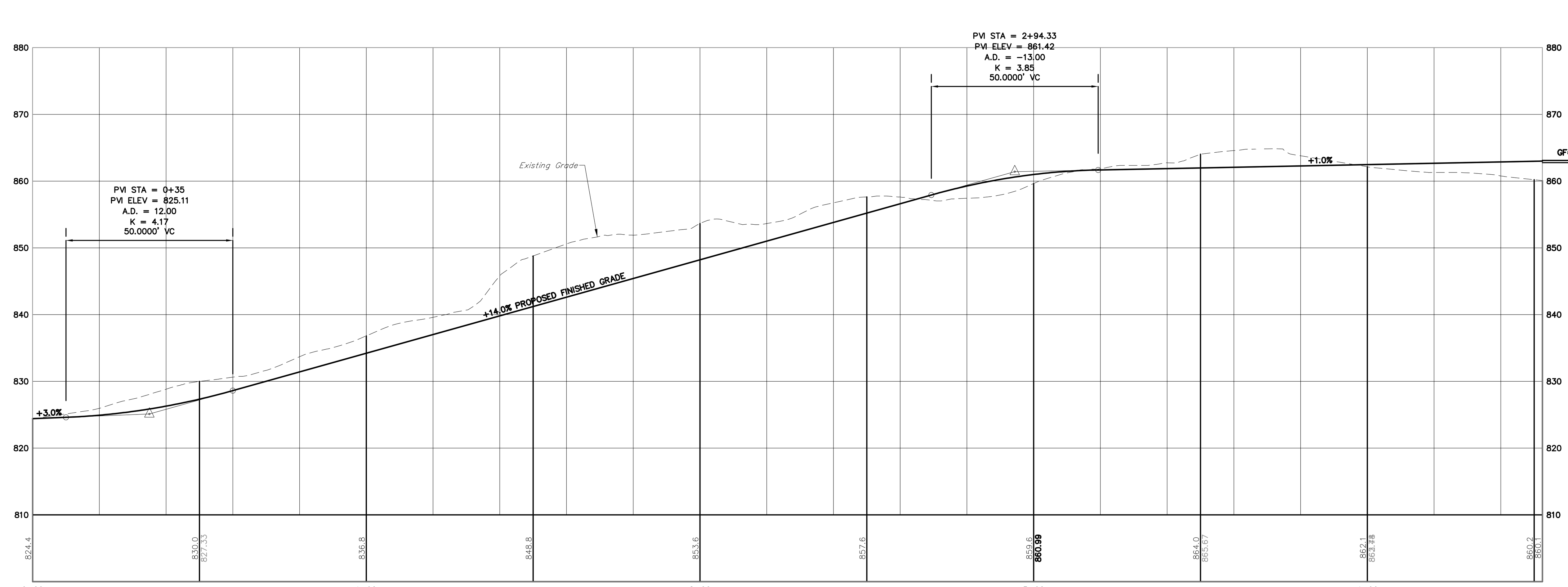

PROPOSED DRIVEWAY PROFILE

HORIZONTAL SCALE 1" = 20'
VERTICAL SCALE 1" = 10'

PLANNING BOARD APPROVAL

Final site plan approval granted by Resolution #________ on________. No certificate of occupancy may be applied for until this site plan is signed below by an authorized representative of the planning board.

BY ________________, 2020.
RONALD J. GAINER, TOWN ENGINEER DATE

The signature below indicates that the site plan has been revised in accordance with Resolution #________ and that all other pertinent outstanding requirements of Resolution #________ have been satisfied.

PHILIPSTOWN PLANNING BOARD

BY ________________, 2020.
NEAL ZUCKERMAN, CHAIRMAN DATE

ARCHITECT

SUSAN T. RODRIGUEZ ARCHITECTURE
555 WEST 25TH STREET
NEW YORK, NY 10001
(212) 463-9021

PROJECT LOCATION

ANGELS HILL, GARRISON
TOWN OF PHILIPSTOWN
COUNTY OF PUTNAM
STATE OF NEW YORK

PROJECT DESCRIPTION

NEW CONSTRUCTION OF A SINGLE-FAMILY RESIDENCE TO BE SERVED BY PRIVATE SEPTIC SYSTEM & DRILLED WELL

PROPERTY OWNERS & APPLICANTS

ROLAND HEITMANN & JEANNE-MARIE FLEMING
7B GARRISON LANDING
GARRISON, NY 10524

NOTES & DETAILS

MINOR SITE PLAN SET

SCALE: AS NOTED

STATE OF NEW YORK · MARGARET SMITH MCMAHON · 103021 · LICENSED PROFESSIONAL ENGINEER

PRINTED
AUGUST 31, 2020
BADEY & WATSON
Surveying & Engineering, P.C.

COPYRIGHT 2020 BY BADEY & WATSON, SURVEYING & ENGINEERING, P.C.

BADEY & WATSON
Surveying & Engineering, P.C.
3063 Route 9
Cold Spring, NY 10516
www.Badey-Watson.com
845.265.9217
845.265.4428 (Fax)
877.3.141593 (Toll Free)

SHEET 2 OF 2

FILE NO. 81-155

DRAWING NAME: SP25352__R02_V04 LAYOUT: DETAILS W.O. NO. 25352 CHECKED BY MSM DRAWN BY JRS